Kitchen Mixers Swivel Kitchen Mixer

SKU: **BU1026.KM**

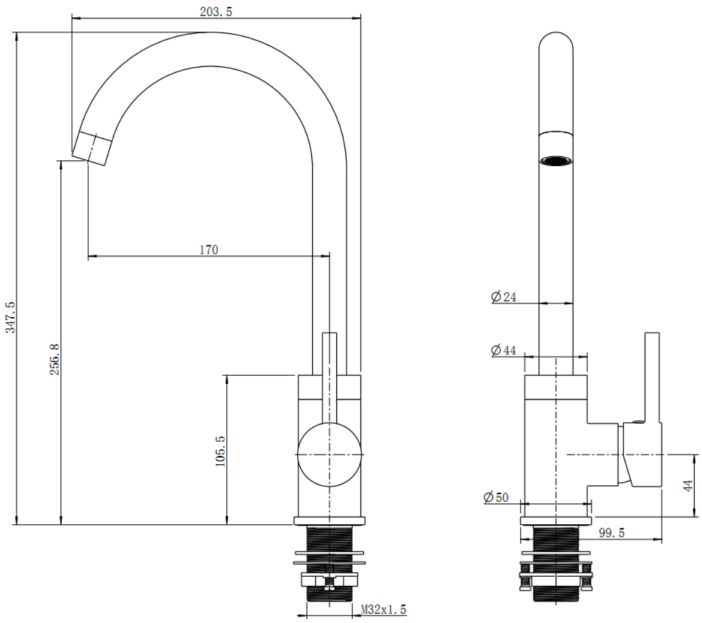

www.aquaperla.com.au

SPECIFICATION

Finish:	Brushed Nickel
Material:	Brass
Dimension:	203.5mmL x 347.5mmH
Pressure Rating:	AS/NZS 3500.1-2003 (Clause3.3.4) specifies 500kPa maximum water supply pressure at any outlet within a building for new installations.
Temperature Rating:	Maximum hot temperature 80°C Minimum 5°C
Water Rating:	WELS: 6 Star, 4L/min flow

CLEANING RECOMMENDATIONS

This product should not be cleaned with abrasive materials. Damage caused by any improper treatment is not covered by the product warranty - refer to Warranty Conditions on our website: www.aquaperla.com.au

Disclaimer: Products in this specification manual must by regulation, be installed by licensed and registered trade people. The manufacturer/ distributor reserves the right to vary specifications or delete models from their range without prior notification. Dimensions are nominal measurements only. Dimensions and set-outs listed are correct at time of publication however the manufacturer/ distributor takes no responsibility for printing errors.

WATER RATING 4.0 litres per minute Licence No.1752

WaterMark