Square Shower Station

SKU: 2130.SH



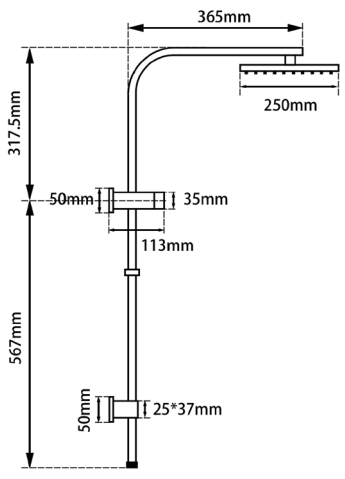

www.aquaperla.com.au

SPECIFICATION

Finish:	Gun Metal Grey/Black & Rose Gold
Material:	Solid Brass & S/S
Dimension:	884.5mmL x 380mmW
Pressure Rating:	Maximum operating pressure 1000kPa Note: For best performance and longer life we recommend 300-800kPa
Temperature Rating:	Maximum hot temperature 80°C Minimum 5°C
Water Rating:	3 Star, 9.0 L / min

INSTALLATION INSTRUCTIONS

Important Note:

Shower must be installed to the requirements of AS/NZS 3500 by a qualified plumber. Your mixer comes to you already factory assembled and tested. We do not recommend the dismantling of any internal part of the shower. The showers are factory tested and sealed so as to give the best performance.

Installation Procedure

1.Please flush out new pipe work prior to connecting the new shower.
2.Working water presure 50-1000kPa.
3.In some areas where the incoming water exceeds 500 kPa, an approved pressure limiting device
must be installed. Equal pressure or hot and cold water supply is required for this shower station.
4.Showers are recommended for use on mains pressures and instantaneous systems only.
5.Make sure no water in tubes and tap when temperature is below 0℃.
6.Best water temperature: 38℃-42℃.
7.Check for leaks.

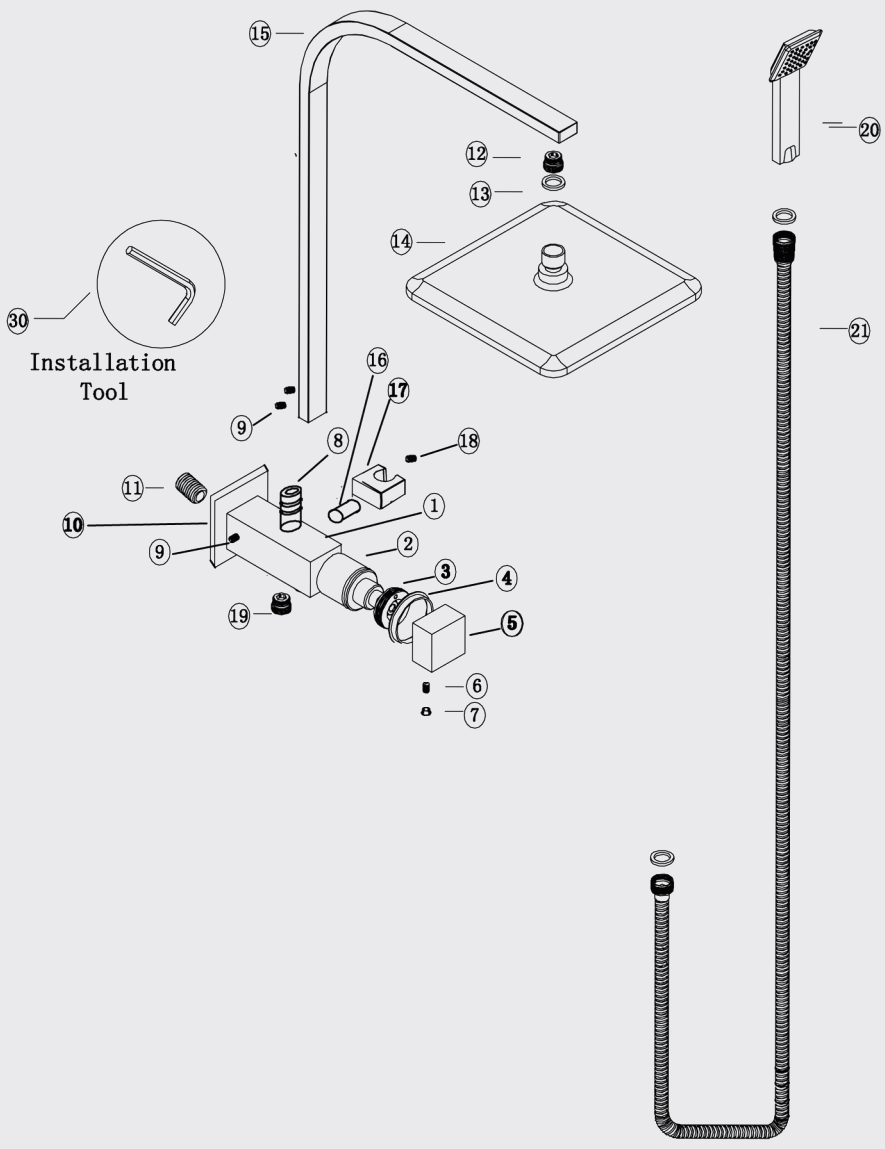

EXPLODED VIEW

Item Description

1-19.Shower Diverter Complete
12.Connect Nut
13..Washer
14.Shower Head
15.Shower Arm
20.Hand Shower
21.Shower Hose
30.Allen Key

CLEANING RECOMMENDATIONS

This product should not be cleaned with abrasive materials. Damage caused by any improper treatment is not covered by the product warranty - refer to Warranty Conditions on our website: www.aquaperla.com.au

Disclaimer: Products in this specification manual must by regulation, be installed by licensed and registered trade people. The manufacturer/ distributor reserves the right to vary specifications or delete models from their range without prior notification. Dimensions are nominal measurements only. Dimensions and set-outs listed are correct at time of publication however the manufacturer/ distributor takes no responsibility for printing errors.

WATER RATING 9.0 litres per minute Licence No.1752

WaterMark