Lucid Pin Series Robe Hook

SKU: **6608.TR**

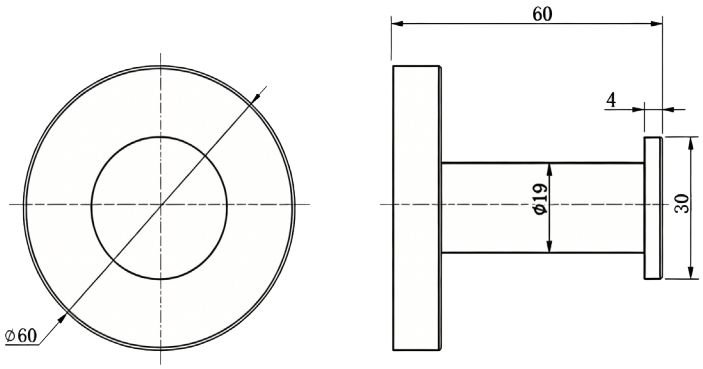

www.aquaperla.com.au

SPECIFICATION

Accessory Type	Robe Hook
Color Availability:	7 Colors
Material:	304 Stainless Steel
Dimension:	60mmL x 60mmH

CLEANING RECOMMENDATIONS

This product should not be cleaned with abrasive materials. Damage caused by any improper treatment is not covered by the product warranty - refer to Warranty Conditions on our website: www.aquaperla.com.au

Disclaimer: Products in this specification manual must by regulation, be installed by licensed and registered trade people. The manufacturer/ distributor reserves the right to vary specifications or delete models from their range without prior notification. Dimensions are nominal measurements only. Dimensions and set-outs listed are correct at time of publication however the man ufacturer/ distributor takes no responsibility for printing errors.