# Caddence Series Split Type Basin Mixer

SKU: **BU0242.BM**

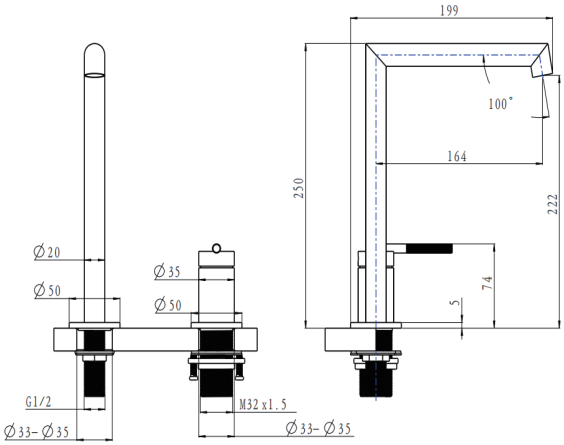


www.aquaperla.com.au

## SPECIFICATION

| | |
|---|---|
| Color Availability: | Brushed Nickel |
| Material: | Brass |
| Dimension: | 250mmL x 199mmH |
| Pressure Rating: | AS/NZS 3500.1-2003 (Clause3.3.4) specifies 500kPa maximum water supply pressure at any outlet within a building for new installations. |
| Temperature Rating: | Maximum hot temperature 80°C<br>Minimum 5°C |
| Water Rating: | 5 Star, 5L/M |

### CLEANING RECOMMENDATIONS

This product should not be cleaned with abrasive materials. Damage caused by any improper treatment is not covered by the product warranty - refer to Warranty Conditions on our website: www.aquaperla.com.au

Disclaimer: Products in this specification manual must by regulation, be installed by licensed and registered trade people. The manufacturer/ distributor reserves the right to vary specifications or delete models from their range without prior notification. Dimensions are nominal measurements only. Dimensions and set-outs listed are correct at time of publication however the manufacturer/ distributor takes no responsibility for printing errors.