Stainless Steel Kitchen Sink

SKU: GM5044-P.KS / BUYG5044-P.KS

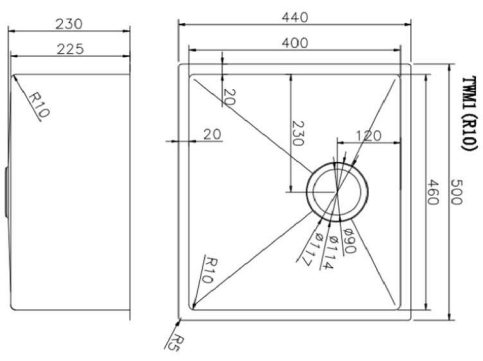

www.aquaperla.com.au

SPECIFICATION

Color Availability:	Brushed Brass / Gun Metal Grey
Material:	Stainless Steel
Dimension:	500mmL x 440mmW x 230mmH
Weight:	9.60KG
Package Size:	510*510*275 mm
Spec.:	Stainless Steel Kitchen Sink
Installation:	Drop-in / Top / Flush / Under-mount

Instructions for Top Mounted Sinks

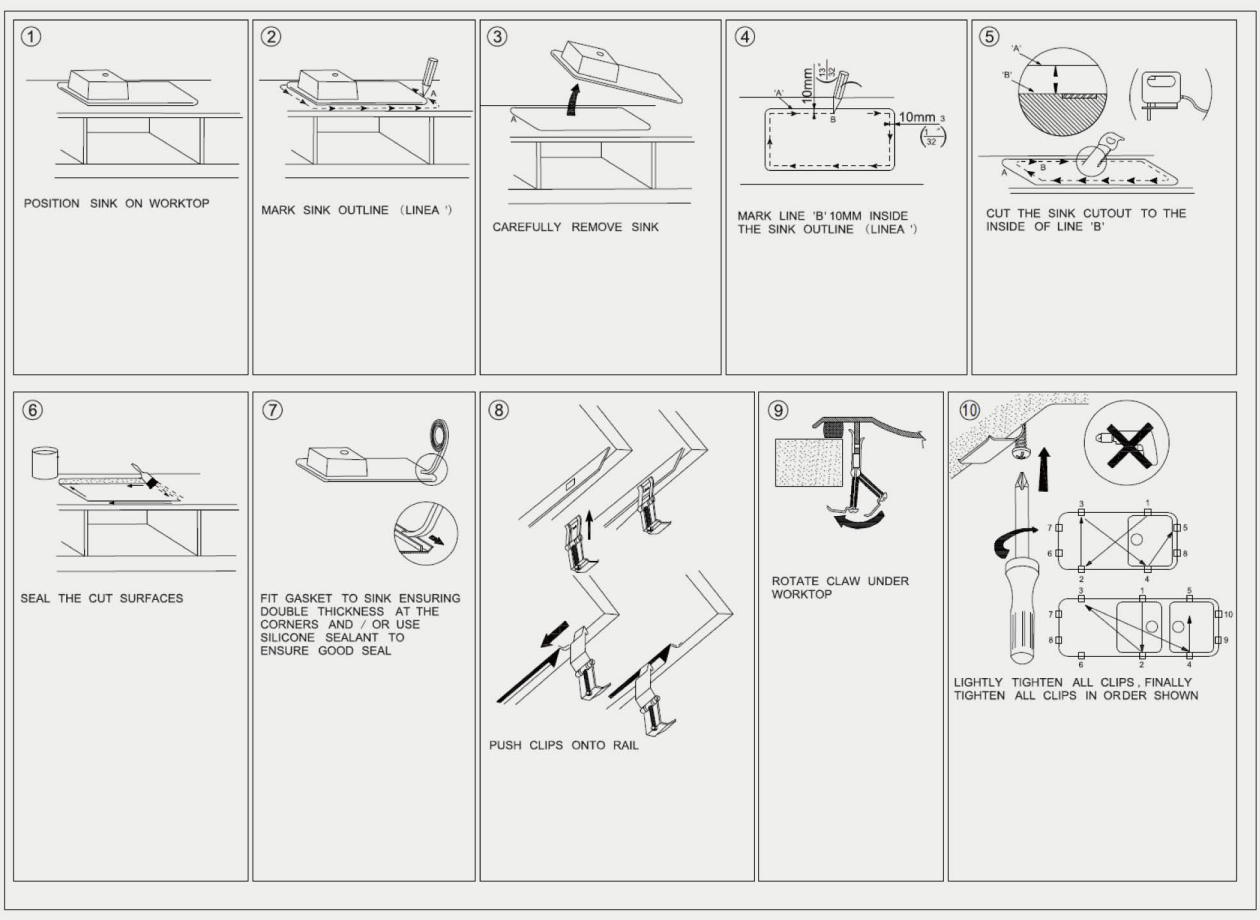

Instructions for Under Mounted Sinks

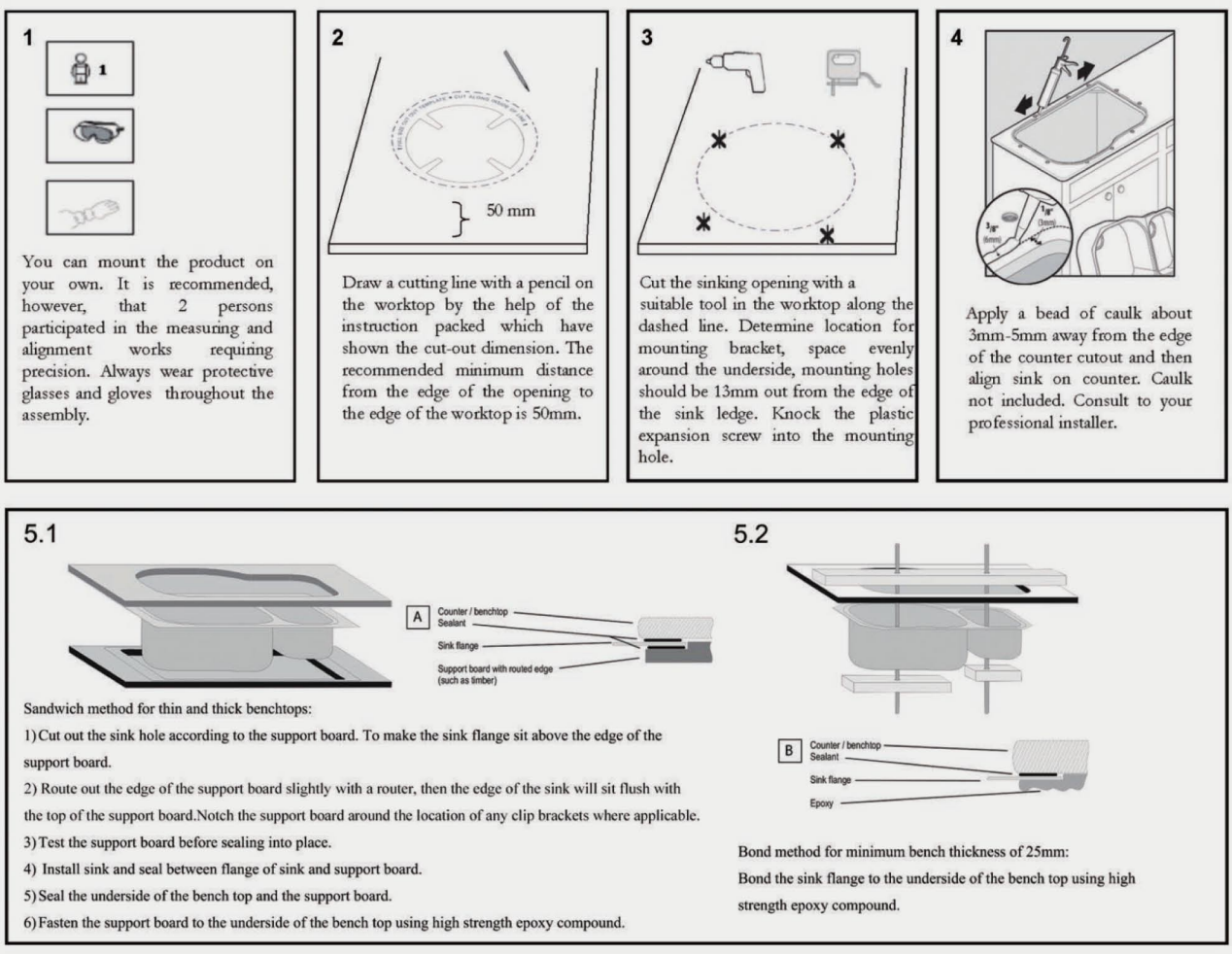

CLEANING RECOMMENDATIONS

This product should not be cleaned with abrasive materials. Damage caused by any improper treatment is not covered by the product warranty - refer to Warranty Conditions on our website: www.aquaperla.com.au

Disclaimer: Products in this specification manual must by regulation, be installed by licensed and registered trade people. The manufacturer/ distributor reserves the right to vary specifications or delete models from their range without prior notification. Dimensions are nominal measurements only. Dimensions and set-outs listed are correct at time of publication however the manufacturer/ distributor takes no responsibility for printing errors.

WaterMark